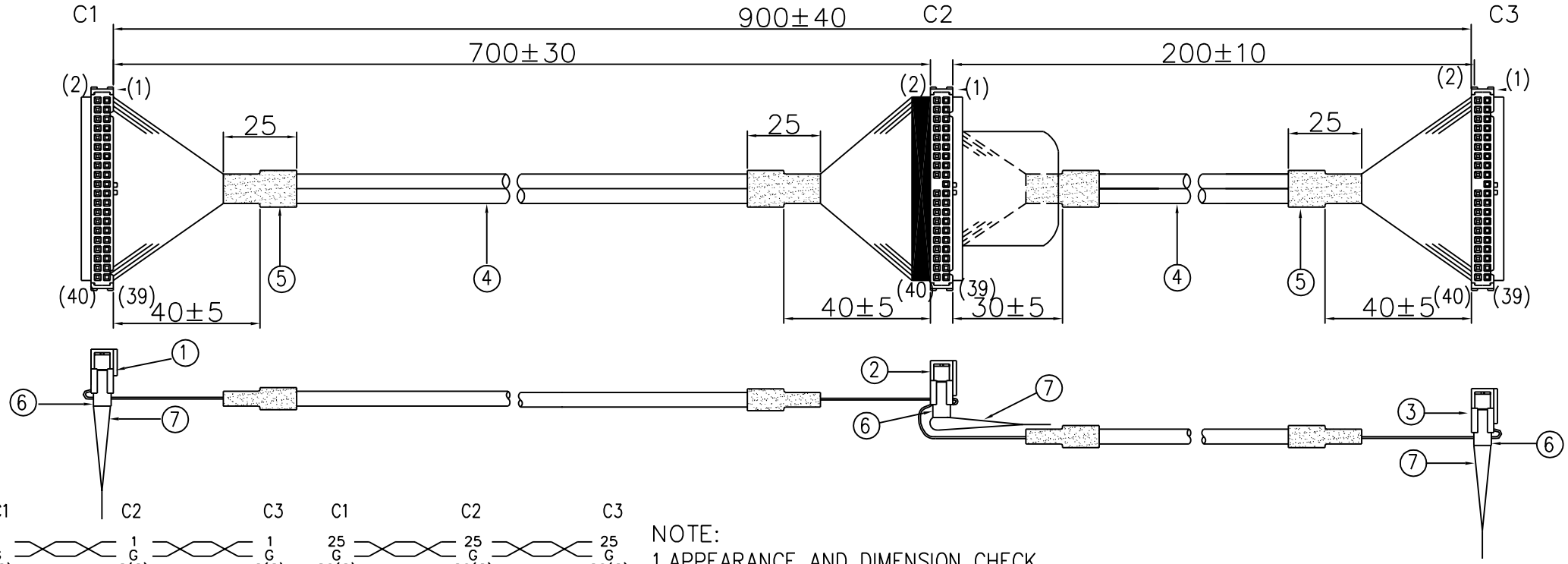

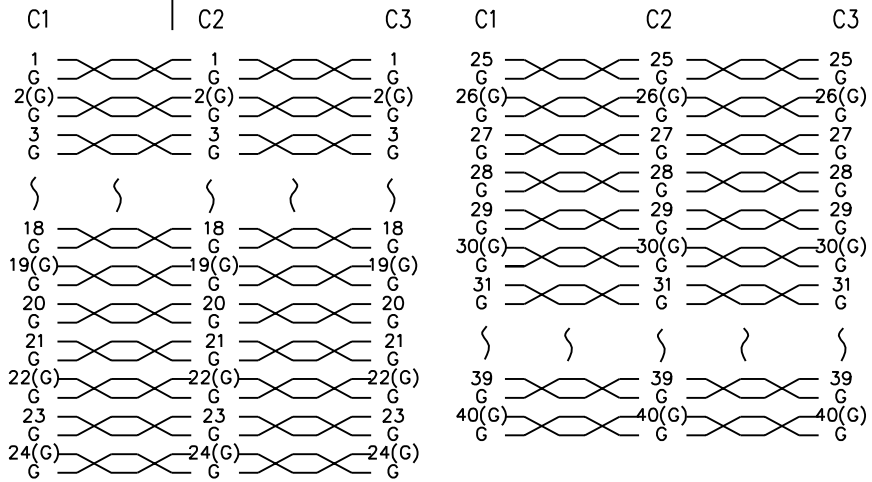

NOTE: 1."G"MEANS GROUND.
2.PIN 20 OF C2&C3 IS KEYPIN,PIN 28 OF C2 IS REMOVED,PIN 34 OF C1 IS CUT.

NOTE:
1.APPEARANCE AND DIMENSION CHECK.
2.CONDUCTIVE TEST (SHORT,OPEN,MISWIRE)
3.DIELECTRIC WITHSTANDING VOLTAGE TEST: AC 350V.
4.INSULATION TEST :DC100V,100MΩ.

NO.	PARTS NAME AND DESCRIPTION	Q'TY	MAKER	REMARK
9	ACETATE TAPE W*L:5MM*220MM	3PCS		
8	ACETATE TAPE W*L:5MM*160MM	1PC		
7	PULL TAB:W*L=40MM*70MM	3PCS	TC&C	
6	058A/C40	3PCS	STARCONN	
5	H-S-T:Φ12MM*25MM,BLACK	4PCS	SUMITOMO	
4	CABLE:UL-VSVC AWG30*20P*2(UL20276) CLEAR WHITE	1010MM	EBARA	
3	058C40-4A11A BLACK	1SET	STARCONN	
2	058C40-4G11A GREY	1SET	STARCONN	
1	058C40-4S10A BLUE	1SET	STARCONN	

REV.	MARK	CHANGED ITEM	APPR.	DATE
A		THE FIRST REVISION		

DESIGNED			
DRAWN			
CHECKED			
APPROVAL			
SCALE	FREE	UNIT	MM

RED WING
ELECTRONICS CO., LTD

PART NO. ULTRA ATA133(395)
CUS.NO. CWF-133F-F70F20