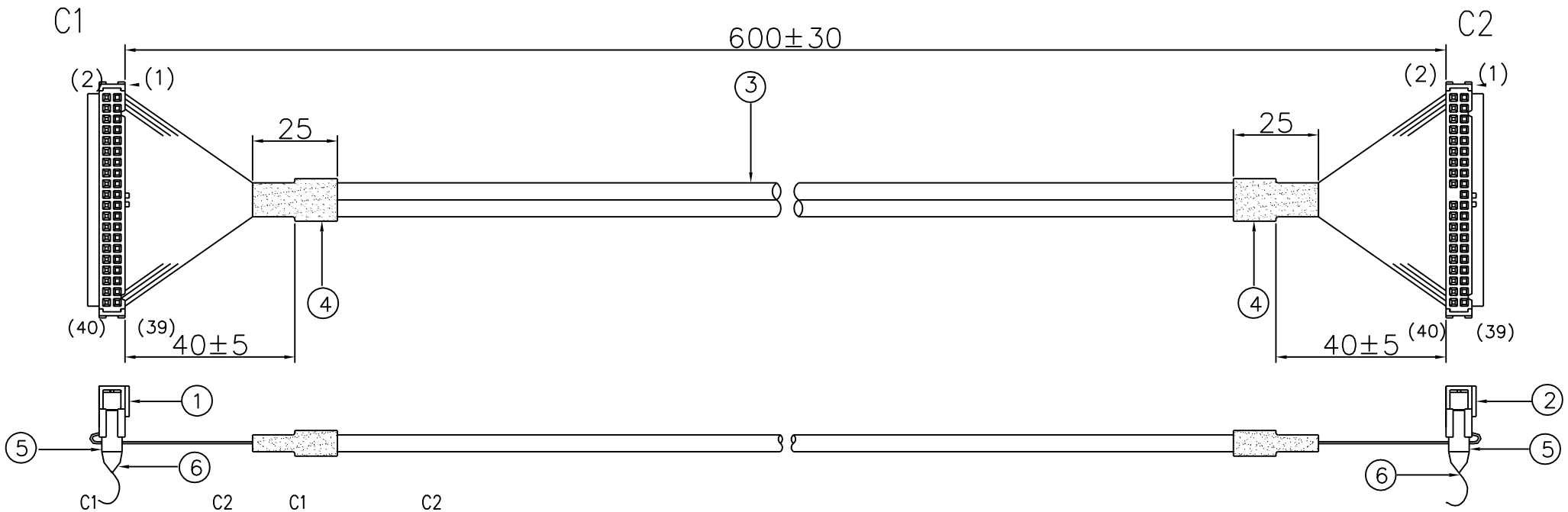

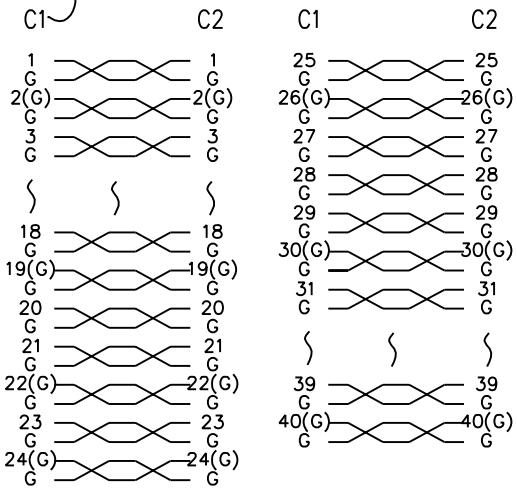

NOTE: 1."G"MEANS GROUND.
2.PIN 20 OF C2 IS KEYPIN,PIN 34 OF C1 IS CUT.

NOTE:

1.APPEARANCE AND DIMENSION CHECK.
2.CONDUCTIVE TEST(SHORT,OPEN & MISWIRE)
3.DIELECTRIC WITHSTANDING VOLTAGE TEST: AC700V.
4.INSULATION TEST: DC100V,100MΩ.

NO.	PARTS NAME AND DESCRIPTION	Q'TY	MAKER	REMARK
6	PULL TAB	2PCS	TC&C OR 3M	
5	058A/C40	2PCS	STARCONN	
4	H-S-T: Φ12MM*25MM,BLACK	2PCS	SUMITOMO	
3	CABLE: UL20276 AWG30*20P*2 CLEAR WHITE WITH BRAID	700MM	EBARA	
2	058C40-4A11A BLACK	1SET	STARCONN	
1	058C40-4S10A BLUE	1SET	STARCONN	

REV.	MARK	CHANGED ITEM	APPR.	DATE
A		THE FIRST REVISION		

DESIGNED			
DRAWN			
CHECKED			
APPROVAL			
SCALE	FREE	UNIT	MM

RED WING
ELECTRONICS CO., LTD

PART NO. ULTRA ATA133(355)
CUS.NO. CWF-133SF-60